POSMAC™
Enhanced POS Solutions

www.posmac.my

ample WIDE

# PM-AP8100

## POS Terminal Machine

Enhanced POS Solutions

*Compact & Slim designed for Hospitality Service*

## #Key Features

# Built for High Traffic Environment
# Seem-less Zero bezel Touch Screen
# 10 Point Touch P-Cap Wide Screen
# Design Installation Flexibility
# Water Splash proof
# Taiwan Commercial grade Terminal

16:9

CPU — Intel Celeron J1900

2GB | 4GB | 8GB SODIMM DDR3

SSD — 64GB | 128GB 2.5” SSD

LCD — 15.6” Projective Capacitive

Option Add on Aluminum A8V2 - 80mm Thermal Printer built with Vesa 75 Stand designed for All in One POS Terminal with printer

Windows 7 Windows 8 Windows 10 Linux FC CE CB

POSMAC™
Enhanced POS Solutions

# Product Specifications

| **Model** | **PM-AP8100-T2** |
|---|---|
| CPU | Intel Celeron Bay Trail D J1900 D/M Series (2M Cache,2.0GHz) |
| Chipset | Intel SoC |
| Memory | Max 1 x 4GB DDR3 (up to 8GB) |
| HDD | Max 1 x 2.5" SATA III 64GB \| 128MB |
| Interface/ Port | 3xUSB 2.0, 1xUSB 3.0 / 4xCOM/ 1xAudio / 1x VGA / 1xLAN |
| Touch Monitor | 15.6 Projected Capacitive Touch (1366x786)<br>Response time 10ms \|Brightness 300 cd/m2<br>Contrast 500:1 \| View Angle (90H/65V) |
| Dimension | 399.7(W) x 40(L) x 252.7(H) mm |
| Operation Condition | Temperature: up to 40 degree<br>Humidity: 10% to 80% |
| **Add On Option** | |
| VFD-AP8100 | 20 x 2 Line Customer Display |
| LCD-800 | 8" TFT Monitor |
| MSR-180SR | MSR Track 1,2,3 Card Reader |
| RFID-AP8100 | 13.56Mks Mifare Card Reader |
| Operating System | Window XP/7/8/10 I POS Ready 7 / 10 IOT |

[Front View]

[Back View]

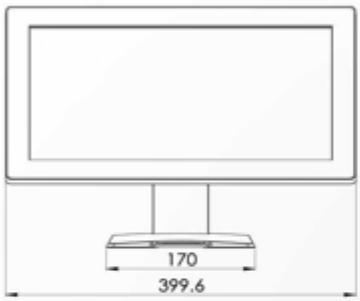

unit : mm

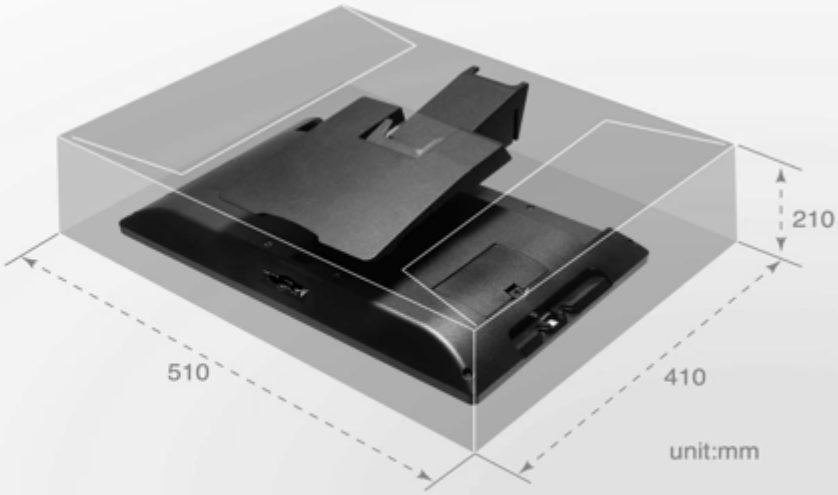


www.posmac.my

SurfsTek

Distribute by SurfsTeK Innovation Sdn Bhd (1188201-U) *A Company of TechnoDex Berhad*
All products, brands or companies are trademarks or registered trademarks of their respective companies
Product specifications are subject to change without prior notice.